STADIUM LOCKER

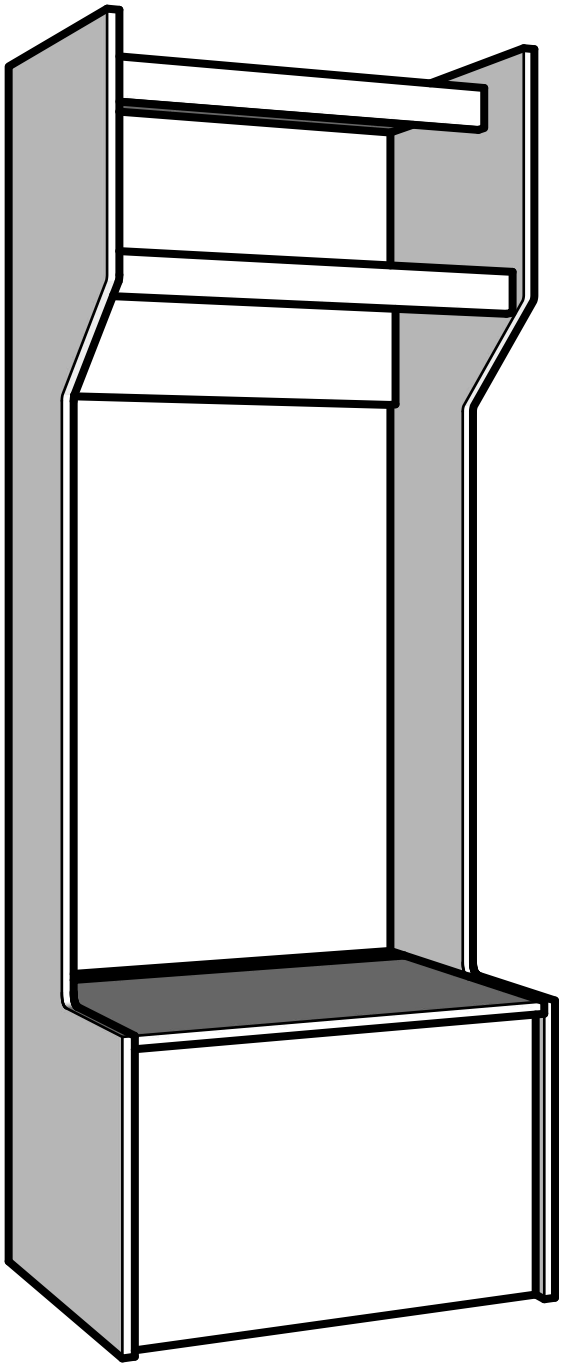

PlayerStall
Since 1989

32x SCREW 1 1/4

25x SCREW 1/2

21x SCREW CAPS

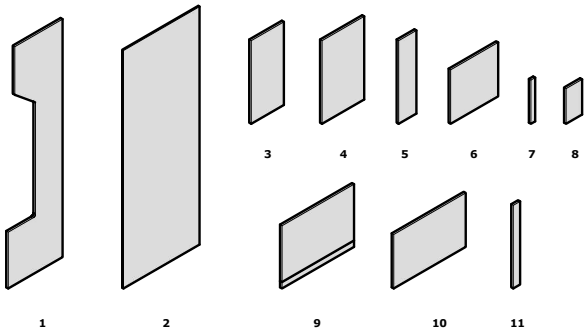

1. 2x SIDE PANEL
2. 1x BACKING
3. 1x TOP SHELF
4. 1x BOTTOM SHELF
5. 1x SHELF SUPPORT
6. 2x SEAT SUPPORT
7. 2x TOP SPACER
8. 2x SHELF SPACER
9. 1x SEAT PANEL
10. 1x BACK PANEL & 1x FRONT PANEL
11. 2x SHELF TRIM

1 SIDE PANELS

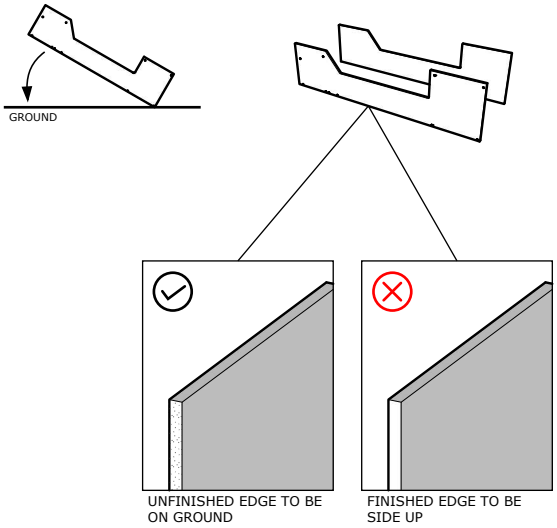

2

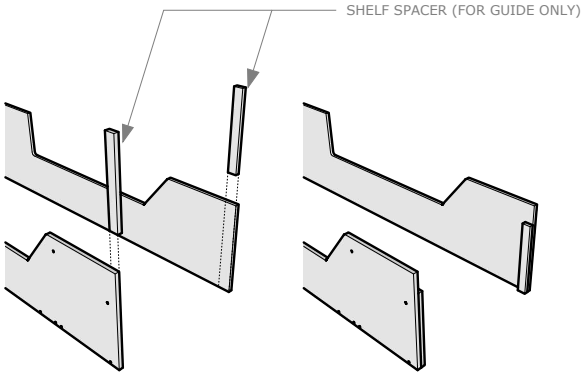

3 TOP SHELF

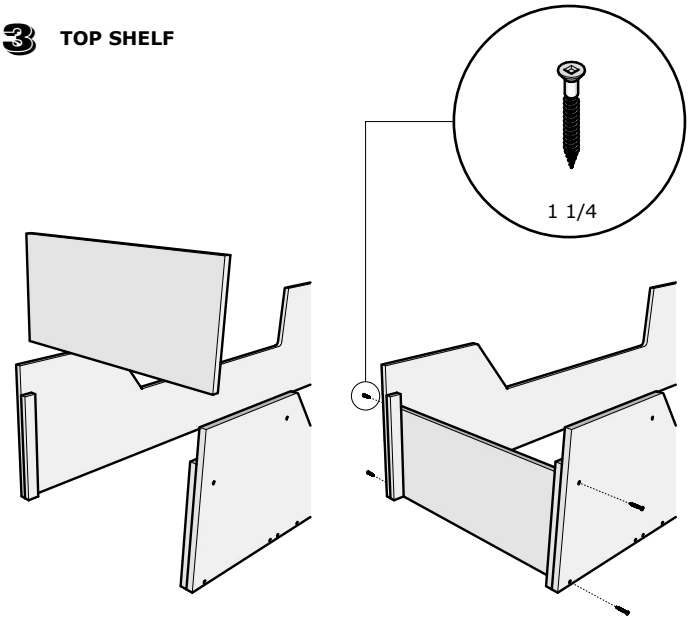

4

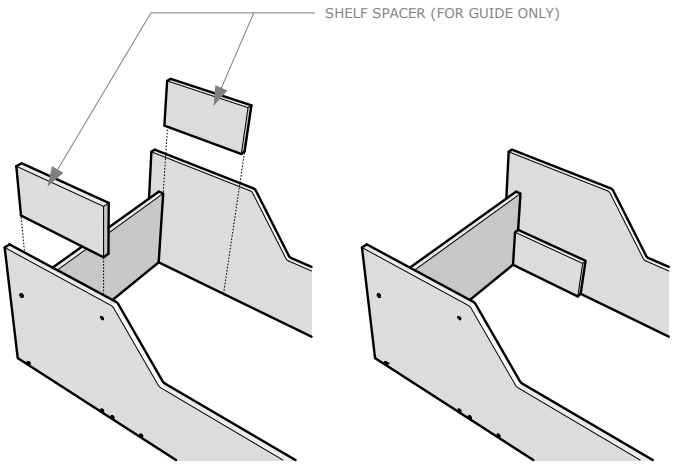

5 BOTTOM SHELF

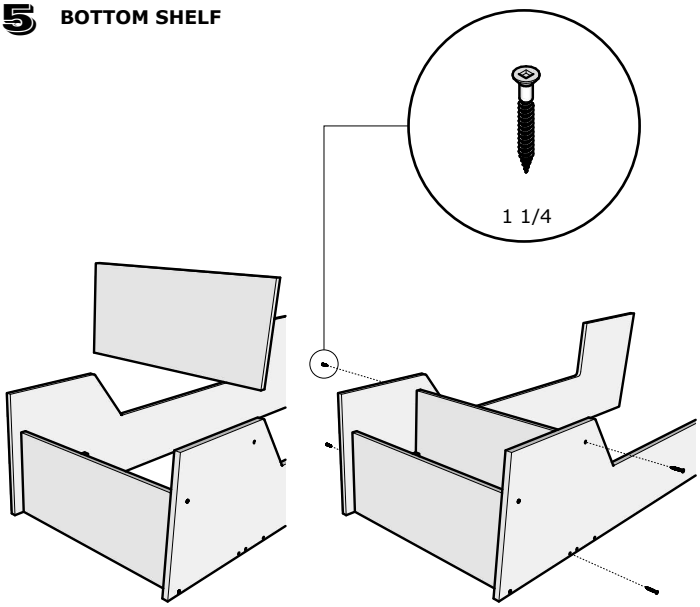

6

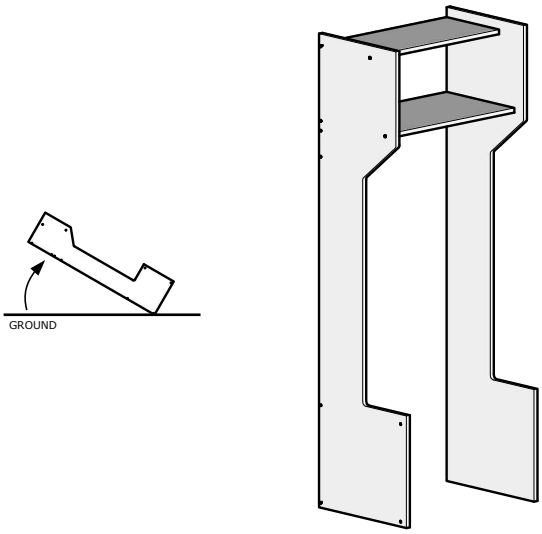

7 SHELF SUPPORT

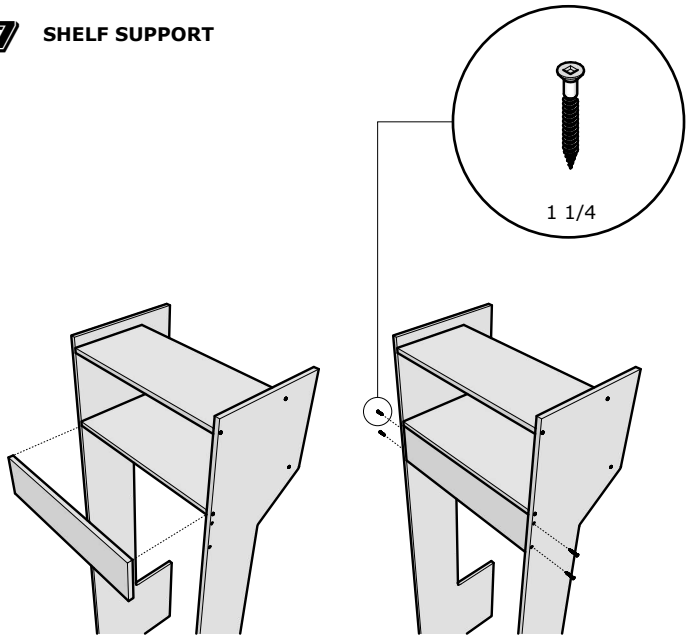

8 BACK PANEL

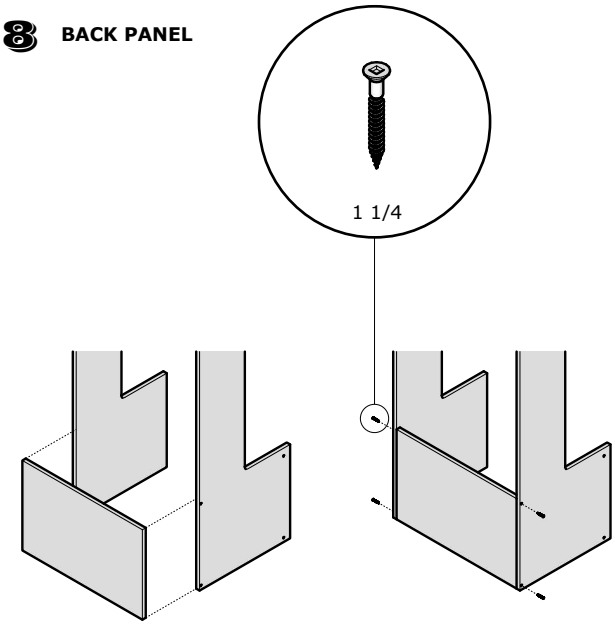

9 SEAT SUPPORT

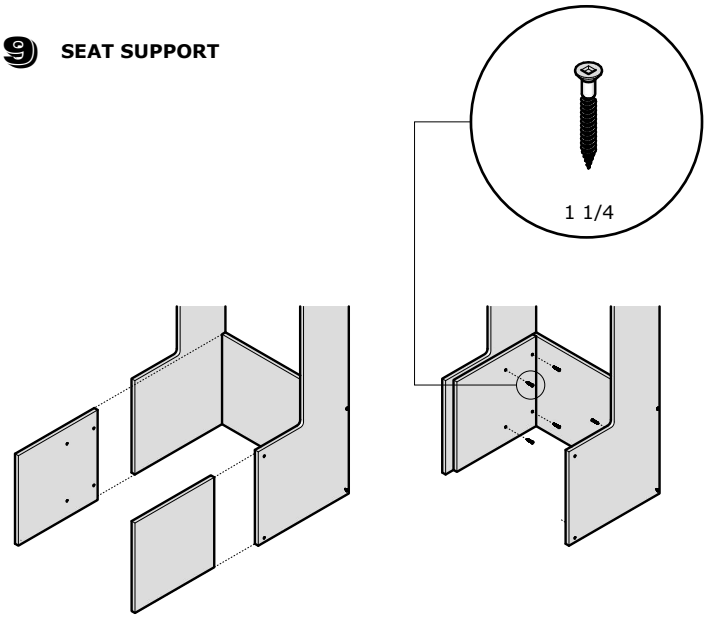

10 FRONT PANEL

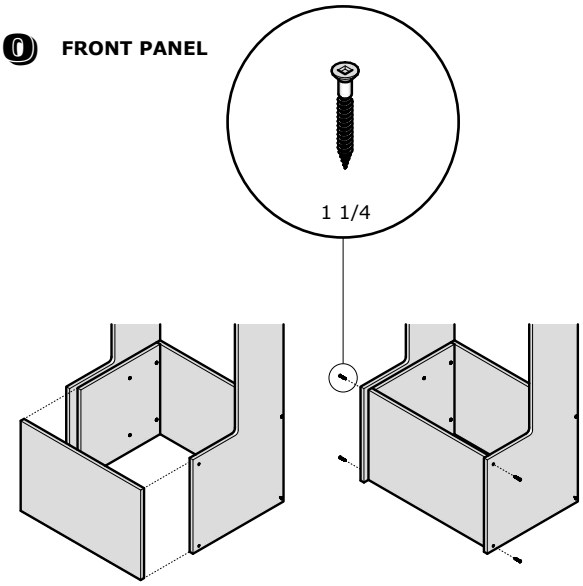

11 SEAT PANEL

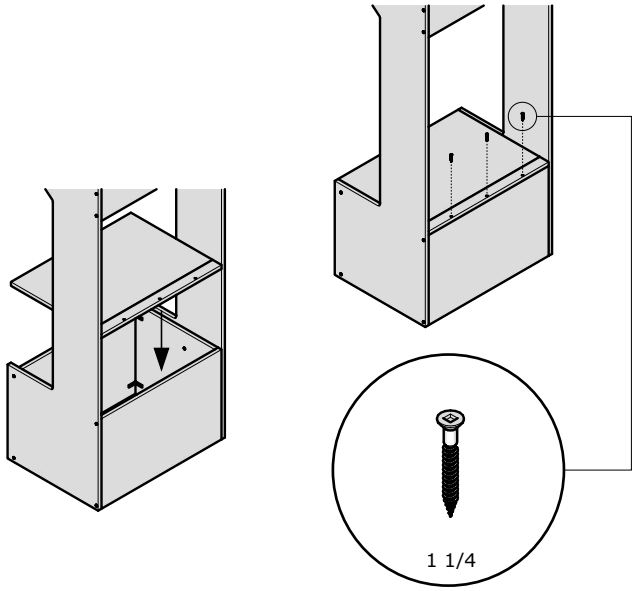

12 SHELF TRIM

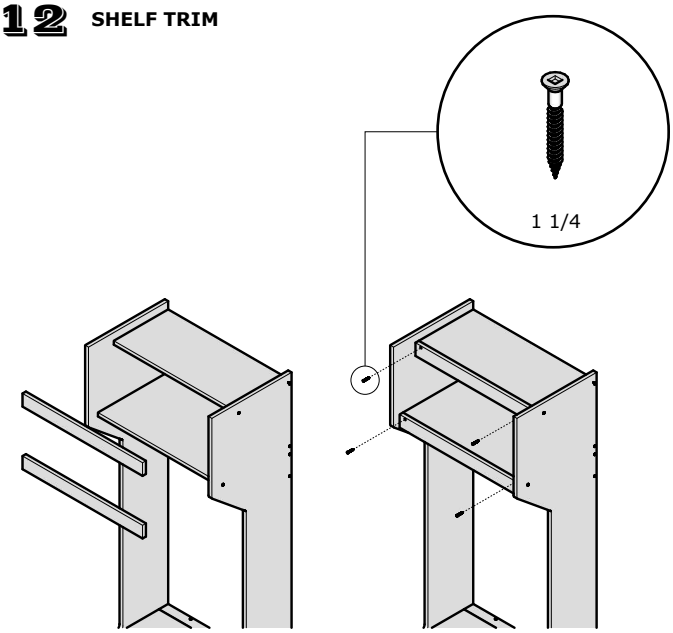

13

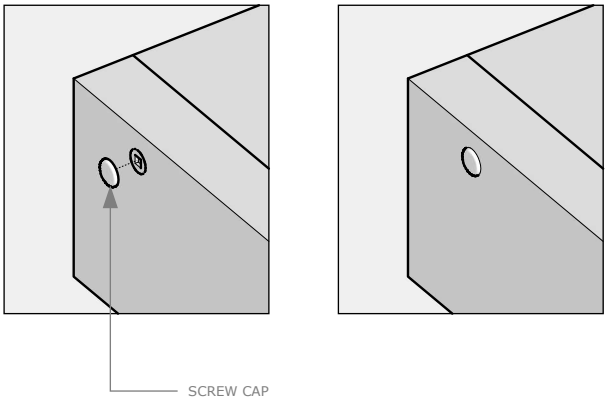

14

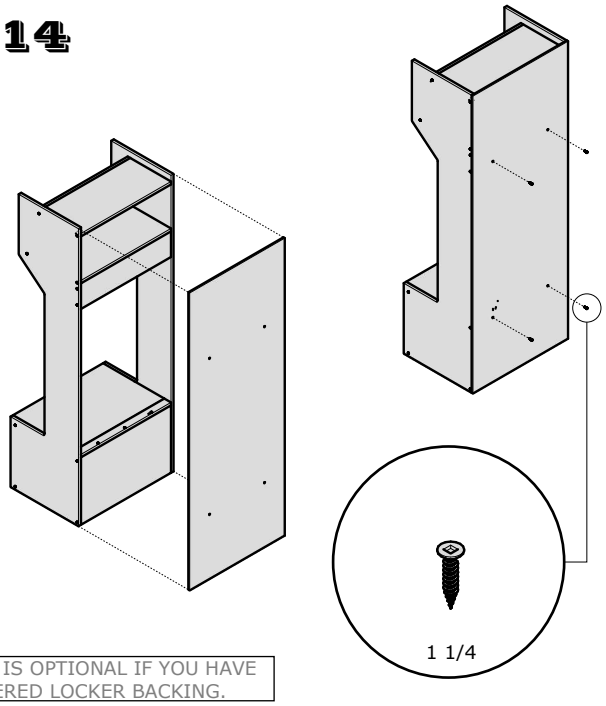

THIS IS OPTIONAL IF YOU HAVE ORDERED LOCKER BACKING.